VILLA RUN

ASSEMBLY GUIDE

Welcome!

Congratulations on becoming an owner of a premium Somerzby product! We hope it brings you and your pet/s many years of enjoyment and contentment.

When your flat pack arrives, please check all items for any damage that might have occurred in transit.

02 4340 4200

info@somerby.com.au

What you will need

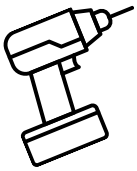

You'll need a battery-powered screwdriver or drill with a Phillips head bit, as well as a flat, level surface to ensure proper alignment of all doors during assembly.

Important Things To Note

- The instructions and screws can be found in carton #1.
- A strong smell may be present when opening. This is the natural timber scent and is not harmful to humans or animals. It will fade over time, especially when placed outdoors.
- When joining two panels, the 1st panel has a guide hole to show where the screw goes. The 2nd panel does not have a predrilled hole. The screw goes directly into the solid timber and forms a tighter join.
- You may notice a shiny or powdery residue on the panels; this is crystallised sap from the natural wood-drying process. It’s completely safe for pets and people and can be wiped off or left as is.

Check list

P1	3.5×50mm	4pcs+1spare	P2	3.5×40mm	20pcs+1spare
P3	3×14mm	6pcs+1spare	P4		1pc
P5		4pcs			

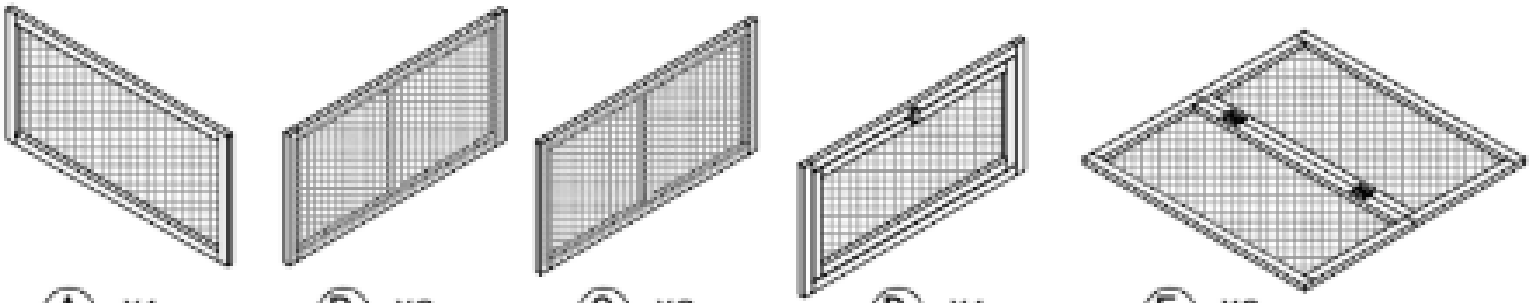

Ⓐ X1 Ⓑ X2 Ⓒ X2 Ⓓ X1 Ⓔ X2

How to Assemble the Villa Run Step I

PARTS

Parts required for step 1
A, B x 2, C x 2
Screws
P2 x 4, P1 x 4

Assembling The Sides:

Attach Panel A to B: Locate the pre-drilled holes on panel A. Use screws P2 x 2 to attach A to B. Ensure the stapled side of the wire is on the inside and the pre-drilled holes of panel B are at the far end.

Repeat for the second Panel B.

Attach Panel B to C: Locate the pre-drilled holes on panel B. Use screws PI x 2 to attach B to C.

Repeat for the second Panel C.

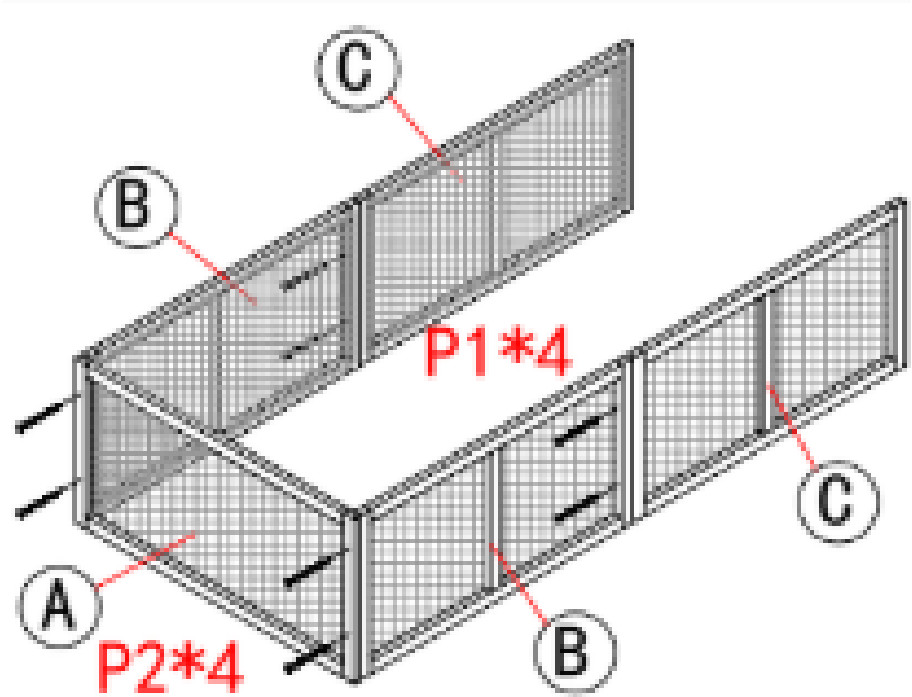

How to Assemble the Villa Run Step 2

PARTS

Parts required for step 2
D
Screws:
P2 x 4

Assemble The End Panel

Attach Panel D: Locate the pre-drilled holes on panel D. Use screws P2 x 4 to attach D to the assembled sides.

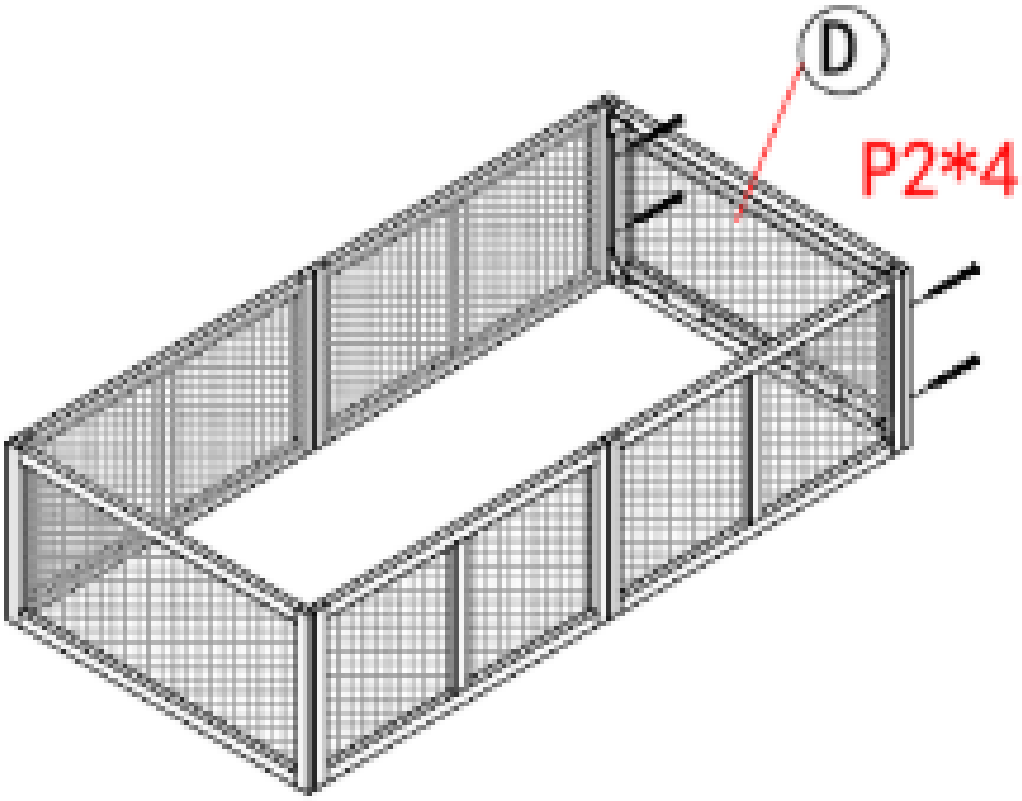

How to Assemble the Villa Run Step 3

PARTS

Parts required for step 3
E x 2, P4
S**crews:**
P2 x 12, P3 x 6

Attach The Roof Panels

Align E x 2 on top of the assembled run with the stapled wire side down. Locate the pre-drilled holes and use screws P2 x I2 to attach.

Attach The Latch: Align P4 on the middle roof sections as shown. Use Screws P3 x 6 to secure.

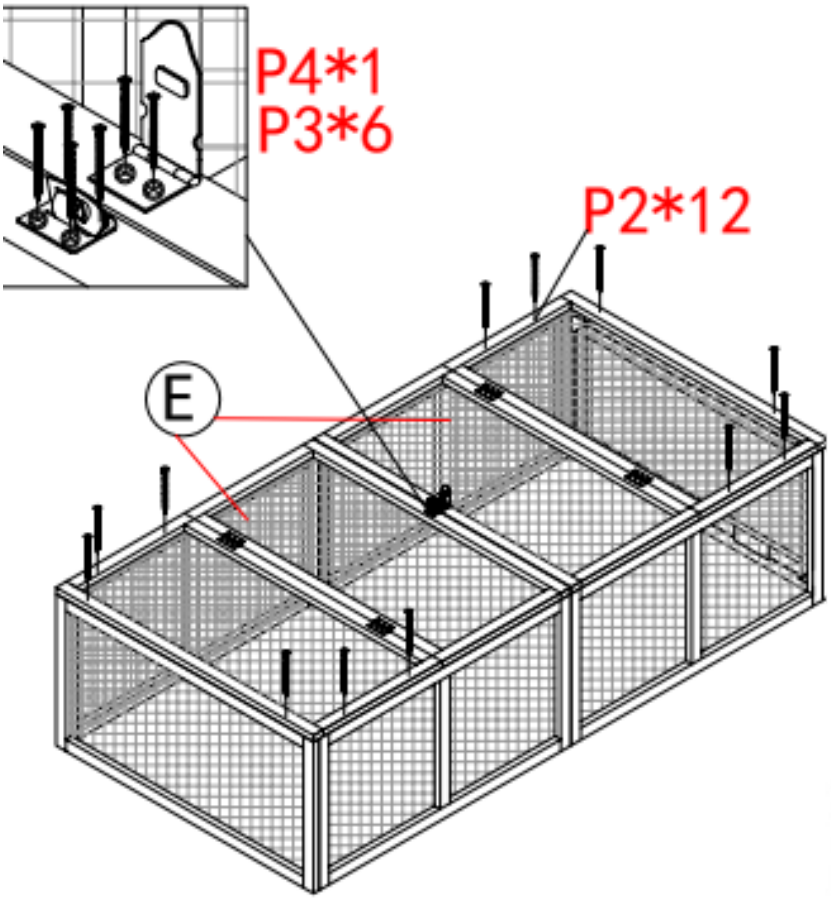

How to Assemble the Villa Run Step 4
(Note: Complete This Step Only If You Are Attaching To The Villa Hutch.)

PARTS

Parts required for step 4
P5 x 4

Remove Mesh Panel:

Turn the latches and remove the inner mesh panel of D.

Attach The Run:

Align the assembled run to the front of the Villa Hutch.

Attach P5 x 4 as shown to join the run to the house.

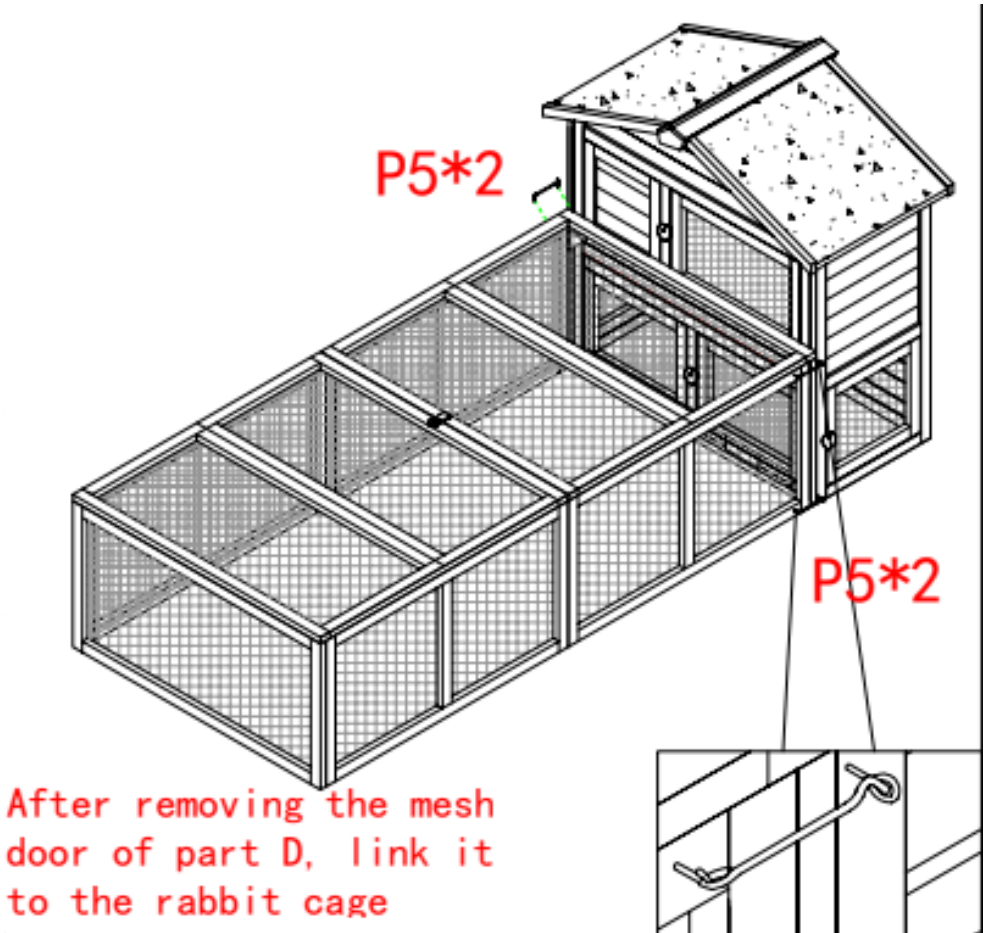

FAQ

Frequently asked questions

Contact Information

Phone: 02 4340 4200

Email: info@somerzby.com.au

Customer Service Office Hours

Monday – Thursday: 9:00am – 4:30pm

Friday: 9:00am – 4:00pm

Saturday & Sunday: Closed

Public holidays: Closed

www.somerzby.com.au

#somerzby

Find us on Facebook

Follow us on Instagram

FOLLOW US ON Pinterest

TikTok